Three-in-one beam lamp

Use the illuminator

Catalogue

1. Precautions and installation 1
1.1 Statement 1
1.2 Maintenance 1
1.3 Product Precautions 1
1.4 Product Introduction 1
1.5 Signal Cable connection 2
1.6 Lamp Installation 2
2 Control Panel 4
2.1 Keystroke Instructions 4
2.2 Main Menu 5
2.2.1 Settings 5
2.2.2 Information 6
2.2.3 Factory 7
3 Channel functions 8
3.1 Channel table 8
4 Common faults 11

1. Precautions and installation Precautions and installation

1.1 Statement

Thank you for choosing our products!734 This product is in good condition and the package is complete when it leaves the factory.For your safe and effective use of this product, please read this instruction carefully and completely before you use this product.This instruction manual contains important information for installation and use. Please install and operate in accordance with the instructions. At the same time, please keep this instruction manual properly for use at any time.Our company does not assume all responsibility for damage to luminaires or other performance due to individuals not following the instructions during installation, use or maintenance.

This manual is subject to technical changes without prior notice.

1.2 Maintenance

- Disconnect the power supply before performing maintenance.
- The lamp should be kept dry and avoid working in wet environment.
- Intermittent use will effectively extend the life of the luminaire.
- For good ventilation and lighting, take care to clean the fan and fan net as well as the lens frequently.
- Do not rub the light fixture housing with organic solvents such as alcohol to avoid damage.

1.3 Product Precautions

- This light fixture is for professional use only.
- Ensure that the power supply voltage is consistent with the equipment requirements before running.
- Do not place this product in a place that is easy to loosen or shake.
- In the process of use, if the lamp appears abnormal, it should stop using the lamp in time.
- In order to ensure the service life of the product, the product should not be placed in damp or leaking places, but also should not work in the environment where the temperature exceeds 60 degrees.
- When the bulb is used, the voltage change of the power supply should not exceed ±10%. If the voltage is too high, the life of the bulb will be shortened. If the voltage is too low, the light color of the bulb will be affected.
- After the power off, it takes 20 minutes to use the lamp to cool down fully before it can be used again.
- The rotating parts of the lamps and pasting accessories must be checked regularly. If they are loose and shake, they should be reinforced in time to prevent accidents.
- In order to ensure the normal use of this product, please read the instructions carefully.

1.4 Product Introduction

- Light source power: 200W;
- Voltage: AC 200V~240V/50~60Hz;
- Color disk: Each color disk consists of 14 color plates + white light;

- Pattern plate: 18 pattern effects;
- 540° translation, 270° tilt.
- Overheat protection;
- Control mode: DMX512/ master-slave/Automatic;
- IP20 protection level

1.5 Signal cable connection

Light fixtures feature standard DMX input and output 3-core or 5-core XLR sockets.Use a shielded twisted-pair signal cable designed for DMX 512;The signal line is generally connected at 150 meters, and the DMX512 signal amplifier must be added for long distance signal transmission.

Connect a shielded twisted-pair signal line from the DMX outlet of the controller to the DMX input of the first device, and from the DMX outlet of the first device to the DMX input of the second device, and so on, until all lights have been connected. Then install a terminal plug on the last connected light outlet 3-core jack on each circuit.(Weld a 4/1W, 120Ω resistor between the 2 and 3 pins of the 3-core pin cannon plug).

Important: The wires should not touch each other or the metal housing.

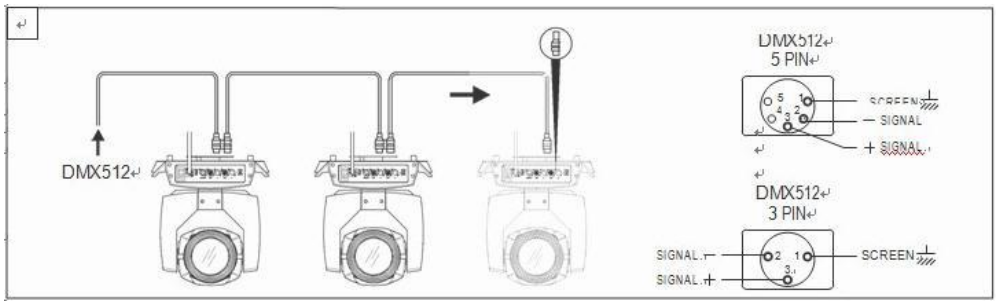

Figure 1 Schematic diagram of DMX signal cable connection

➢ Calculation method of starting address code of luminaire:

The initial address code of the current luminaire is equal to (the initial address code of the previous luminaire)+(the number of channels of the luminaire)

1: Start address code value A001 of the first luminaire.

2: The basic channel number of the controller, should be greater than or equal to the total number of channels used by the lamp.

3: Note: when using any controller, each lamp should have its own initial address code, if the initial address code of the first lamp is set A001, the number of lamp channel pass is 16CH;Then the start of the second lamp address code is set to A017;The initial address code of the third lamp is set to A033;And so on,(this setting also needs to be determined according to different control platforms)

1.6 Luminaire installation

Light fixtures can be placed horizontally, slanted, and hung upside down.Be sure to pay attention to the installation method when hanging diagonally and upside down.

As shown in Figure 2, before positioning the lamp, it is necessary to ensure the stability of the installation site. When installing the reverse hanging, it is necessary to ensure that the lamp does not fall down on the support frame. It is necessary to use the safety rope through the support frame and the lamp handle for auxiliary hanging to ensure safety. Prevent the luminaire from falling and sliding.

When installing and debugging the lamps, it is forbidden for pedestrians to pass under them. Regularly check whether the safety rope is worn and whether the hook screws are loose.

Our company does not assume any responsibility for all consequences caused by the fall of the lamp due to the unstable installation of the hanging.

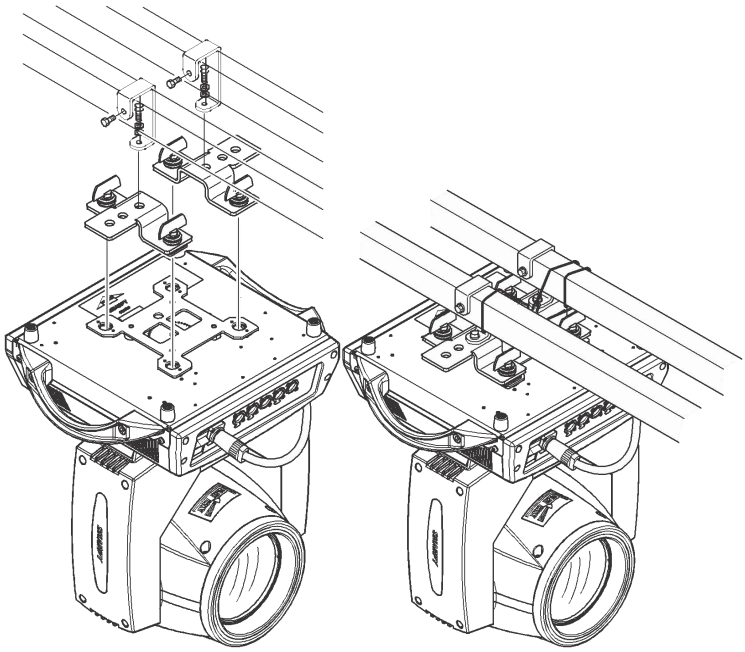

Figure 2. Schematic diagram of the lamp hanging upside down

2. Control panel

2.1 Key Instructions

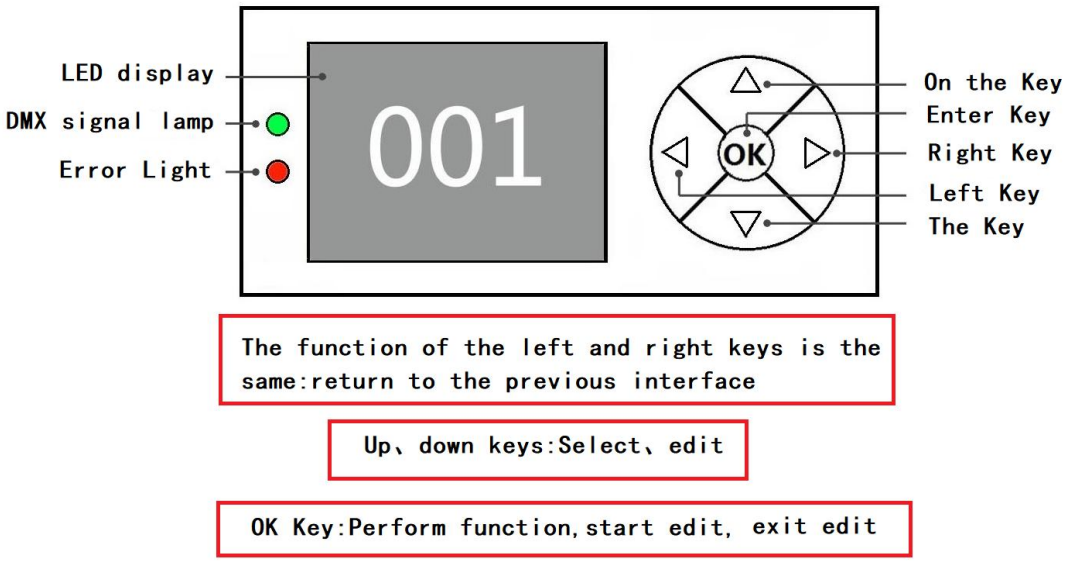

Figure 3 Schematic diagram of key description on the panel

The following takes "Modify DMX address code" as an example to describe the use of keys:

1, if the current is not the main interface, press the "left" key (one or more times) to return to the main interface

2, in the home screen, press the "up" key or "down" key to select the "Settings" button

3. Press the "OK" key to enter the "Settings" interface

4, in the "Settings" interface, press the "up" key or "down" key to select "DMX

address"
5, press the "OK" key to enter the editing state
6, press the "up" key or "down" key to modify the DMX address code
7, press the "OK" key to exit the editing state

2.2 Menu Description

Figure 4 Schematic of the main menu

2.2.1 Settings

Options	Instructions	
Running mode	DMX	Slave state: Receives DMX signals from the console or mainframe

	Bootstrapping	Host state: Self-actuated and sends DMX signal to slave
	Voice control	
DMX address	1-512	Press "OK" to enter editing mode.At this point, the hundreds digit is selected, and press the "up" and "down" keys to change the address code.Press the "OK" key again to select the tens edit.Press "OK" once more to select the ones edit.Press again to exit the editing state
Light Bulb	Off	Closing bubble
	On	Brightening bubble
Motor reset	Off	
	On	Light fixture reset
Channel mode	Standard 17CH	Standard 17 channel mode
Language	Chinese	Set to the Chinese interface
	English	Set to the English interface
Screen flip	Off	Front display
	On	Screen reverse display
X Inversion	Off	
	On	
Y-reverse	Off	
	On	
XY swap	Off	
	On	Channel for switching XY axes (including trims)
XY encoder	On	Use an encoder (optocoupler) to judge out of step and automatically correct the position
	Off	Correct the position without using an encoder (optocoupler)
DMX signal	Hold	Continue running in its original state
	Clear zero	Turn the motor back and stop running
Wind speed low turn off bubble	On	If the blower speed is too low, it will automatically extinguish the bubble
	Off	The blower speed is too low and will not automatically extinguish the bubble
Turn on brightening bubble	Off	Direct reset after power on, no light bulb (need to manually light bubbles with menu or console)
	On	Automatically light up bubbles after power on, and to wait until the bulb successfully lit up before reset
The color wheel changes linearly	On	The color wheel changes linearly
	Off	Color wheel nonlinear change, half color change
Restore default Settings		When you see the confirmation dialog after pressing "OK", press "OK" again to restore the default Settings

2.2.1 Manual

Consistent with the channel table!

2.2.3 Factory

Calibration	X-axis	After entering the sub-interface, you can adjust the reset position of the motor such as X axis and Y axis to make up for the error on the hardware installation. The adjustment range is -128~+127, and +0 indicates no adjustment.
	Y-axis	
	Color	
	Patterns	
	Focusing	
	Dimming	
	Prism 1 zero	
	Prism 1 stroke	
	Prism 2 zeros	
	Prism 2 stroke	
	Frost calibration	
	Colorful mirror	

2.2.4 Information

Options	Instructions	
DIS		Display board software version
MT		Motor board software version
System error		If the red ERR indicator lights up, it indicates that the lamp is running incorrectly. You can enter the sub-interface to check the details. After viewing, you can press the "Clear" button to clear the error record
Blower speed		Displays the current blower speed
Hall status	0000000	0 when magnetic is detected, 1 otherwise
The X-axis codes the disk step value	0000	The number of steps should increase when walking in the forward direction and decrease when walking in the opposite direction. The number should be normal every time you reach the same point
The Y-axis codes the	0000	The number of steps should increase when walking in the forward direction and

disk step value		decrease when walking in the opposite direction. The number should be normal every time you reach the same point
Permission duration	9999	9999 stands for no encryption and can be used for a long time; Other values represent the remaining use time, with encryption;

Common error messages	Instructions
MT board connection failed	The motor board is not responding. There is a problem with the serial communication line connecting the display board to the motor board, or there is a problem with the motor board.
X-axis reset failed	There is a problem with the X-axis photoelectric switch, or with the X-axis motor or motor board
Y-axis reset failed	Y-axis photoelectric switch, or Y-axis motor or motor board has a problem
X axis Hall error	X-axis Hall, or there is a problem with the motor board
Y-axis Hall error	Y-axis Hall, or a problem with the motor board
Color plate reset failed	Color disk Hall, or there is a problem with the color disk motor
Pattern disk reset failed	Pattern plate Hall, or pattern plate motor has a problem
The focus reset failed	Focus Hall, or there is a problem with the focusing motor
Bulb control failure	Failure to light or extinguish bubbles, faulty laminator or bulb

3. Channel function

3.1 Channel table

Channe ls	17 channel pattern
1	X
2	X Fine
3	Y
4	Y Fine
5	XY Speed
6	Dimming
7	Shutter
8	Color
9	Gobo
10	Gobo2
11	Gobo2 Rotation
12	Focus
13	Zoom
14	Prism
15	Prism Rotation
16	Frost
17	Reset

Channel	Features	Channel value	Effects
1	X	000-255.	Horizontal 540 degree scan
2	X Fine	000-255.	Horizontal 1.2 degree fine tuning
3	Y	000-255.	Vertical 270 degree scan
4	Y Fine	000-255.	Vertical 1.2 degree fine tuning
5	XY Speed	000-255.	From fast to slow
6	Dimming	000-255.	Dark to light
7	Shutter	000-003. 004-250. 251-255.	Light brake closed Stroboscopic from slow to fast Light brake on → (controlled by dimmer channel)
8	Color	000-002. 003-005 006-008 009-011 012-014 015-017 018-020 021-023 024-026 027-029 030-032 033-035 036-038 039-041 042-044 045-047 048-050 051-053 054-056 057-059 060-159. 160-205 206-255	White light White light + Color 1 Color 1 Color 1+ Color 2 Color 2 Color 2+ Color 3 Color 3 Color 3+ Color 4 Color 4 Color 4+ Color 5 Color 5 Color 5+ Color 6 Color 6 Color 6+ Color 7 Color 7 Color 7+ Color 8 Color 8 Color 8+ Color 9 Color 9 Color 9+ white light Color linear Reverse flowing water (from fast to slow) Forward flow (slow to fast)
9	Gobo	000-009 010-019 020-029 030-039 040-049 050-059 060-069	White light Gobo 1 Gobo 2 Gobo 3 Gobo 4 Gobo 5 Gobo 6

		070-079 080-089 090-099 100-104 105-109 110-114 115-119 120-124 125-129 130-134 135-139 140-144 145-200 201-255	Gobo 7 Gobo 8 Gobo 9 Gobo 1 Shake(from slow to fast) Gobo 2 Shake(from slow to fast) Gobo 3 Shake(from slow to fast) Gobo 4 Shake(from slow to fast) Gobo 5 Shake(from slow to fast) Gobo 6 Shake(from slow to fast) Gobo 7 Shake(from slow to fast) Gobo 8 Shake(from slow to fast) Gobo 9 Shake(from slow to fast) Forward flowing water (from fast to slow) Reverse flow (slow to fast)
10	Gobo2	000-009 010-019 020-029 030-039 040-049 050-059 060-069 070-079 080-089 090-099 100-109 110-119 120-129 130-139 140-149 150-200 201-255	Gobo 1 Gobo 2 Gobo 3 Gobo 4 Gobo 5 Gobo 6 Gobo 7 Gobo 8 Gobo 2 Shake (from slow to fast) Gobo 3 Shake (from slow to fast) Gobo 4 Shake (from slow to fast) Gobo 5 Shake (from slow to fast) Gobo 6 Shake (from slow to fast) Gobo 7 Shake (from slow to fast) Gobo 8 Shake (from slow to fast) Reverse flowing water (from fast to slow) Forward flow (slow to fast)
11	Gobo2 Rotation	000-127. 128-191. 192-255.	Angle adjustment Reverse fast rotation to slow rotation Forward slow spin to fast spin
12	Focus	000-255.	Gobo clarity from far to near
13	Zoom	000-255.	Gobo clarity from far to near
14	Prism	000-127. 128-255.	None Prism cut in
15	Prism Rotation	000-127. 128-191. 192-255.	Prism Angle adjustment Reverse rotation (from fast to slow) Forward rotation (from slow to fast)
16	Frost	000-127. 128-255.	None Frost cut in

17	Reset	000-249. 250-255.	None Reset All

4. Common faults

According to some common faults, the corresponding solutions are put forward.Any unsolvable problems should be dealt with by professionals.Disconnect the light fixture before maintaining it.

1. Light bulb is not on

- Check that the voltage that matches the light fixture is installed;
- Check whether the lamp supply power connection or control switch is in bad contact;
- Check if the power supply is insufficient;
- Check that the DMX512 controller is sending instructions.

2. The light fixture does not accept control from the console after normal reset

- Check luminaire digital start address value and function options are correct;
- Check whether the connection of communication control line is correct, the communication line is too long or has been interrupted;
- Check whether the control equipment is invalid, check whether the serial access signal amplifier is invalid;
- Check whether the communication line is too long or other equipment interferes with each other;
- Optimize wiring, shorten the length of control signal lines, high voltage and low voltage lines separate wiring;
- Add signal amplifiers;
- Signal line using high-quality shielded twisted pair wire;
- Connect the signal terminal resistor (120 ohm) at the end of the lamp.

3. Luminaire does not start

- Check that the power supply parameters are consistent with the lamp;
- Check the poor contact caused by extrusion deformation, vibration and moisture of internal

parts in the long distance transportation process

Or fall off.

- Please check whether the internal wire integration connector of the lamp has fallen off or loosened.
- Check whether the electronic components of the lamp (such as electronic transformer, PCB board, motor control board, etc.) are loose, short circuit and burned out.

4. When working, the action of the X or Y axis of the lamp is not normal

- Follow the previous step to check them one by one;
- Check whether the transmission belt corresponding to the X and Y axis directions in the lamp falls off and breaks;
- Check whether the data feedback receiver (optocoupler) corresponding to the X and Y directions in the lamp is damaged;
- Restart the machine and reset it once.